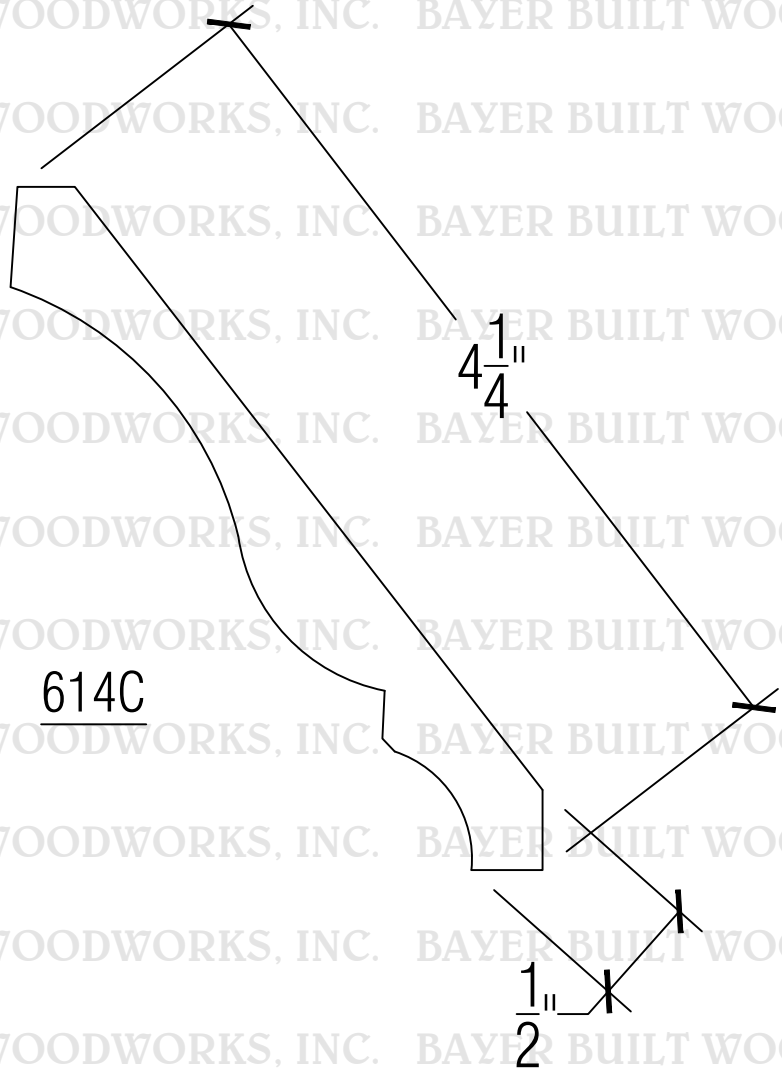BAYER BUILT WOODWORKS, INC.